环保物料

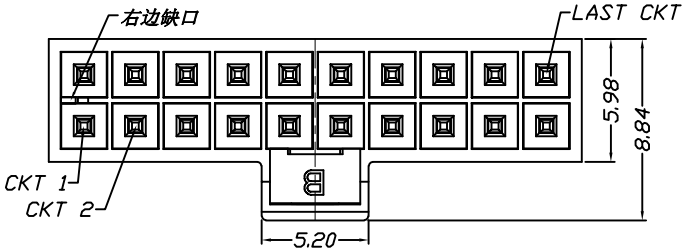

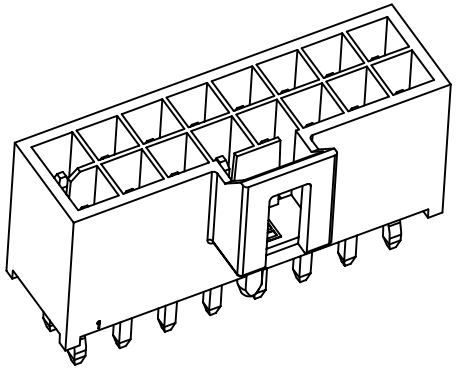

Specification技术规范:

Voltage Rating额定电压: 250V AC/DC
Current Rating额定电流: 3A AC/DC
Withand Voltage耐电压: 1500V AC/Minute
Contact Resistance接触电阻: 10mΩ Max
Insulation Resistance绝缘电阻: 1000MΩ Min/1000V DC
Temperature Range工作温度: −40°C~+105°C
Plating电镀:
Light Tin plating over Nickel底面镀镍，表面镀亮锡
Ni镍: 30−60uinch
Tin锡: 80uinch min

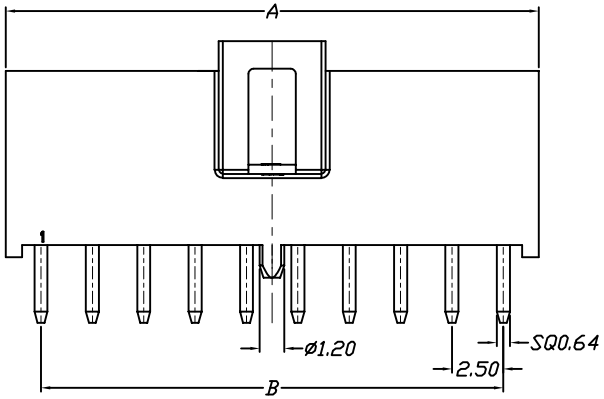

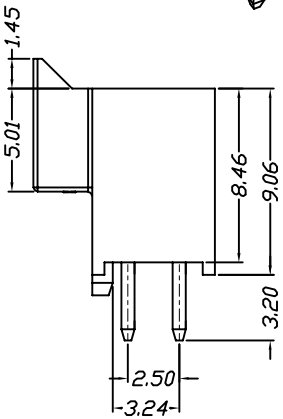

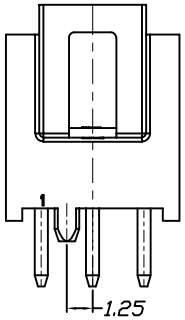

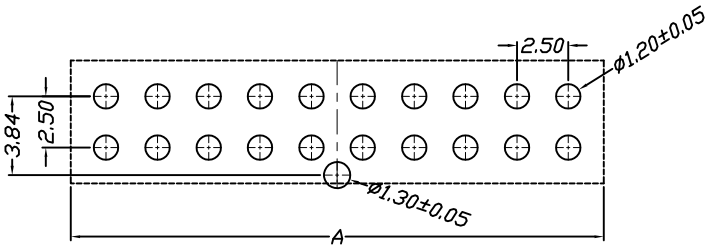

Recommended PCB patterm 2*2P、2*4P、2*6P、
THICKNESS=1.6 TO 2.4mm 2*8P、2*10P参考此图

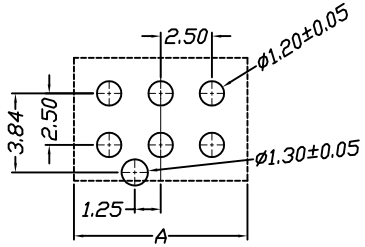

2*3P、2*5P、2*7P参考此图

Circuits Part No	Dimensions A	Dimensions B
2*2P	5.94	2.50
2*3P	8.44	5.00
2*4P	10.94	7.50
2*5P	13.44	10.00
2*6P	15.94	12.50
2*7P	18.44	15.00
2*8P	20.94	17.50
2*10P	25.94	22.50

Material	Color	PIN Material
LCP UL94V-0	BLACK	Brass/Sn&Ni-plated

REV.	REVISION RECORD	DATE
A0	新图面发行	2021.05.30

UNIT: MM
SIZE: A4

GENERAL TOLERANCES	
LINEAR	ANGLES
0.0±0.50	X° REF±6°
0.00±0.30	X° ±3°
0.000±0.20	X° X'±2°

SCALE: 1:1	NAME	DATE
APPROVED	黎腾	2021.05.30
DESIGNER	肖坤权	2021.05.30
DRAWN	黄薇	2021.05.30

康导新能源
网址: www.dgconne.com 电话: 0769-85337633
邮箱: 2850175986@qq.com 传真: 0769-85392827

TITLE: PH2.5MM 2*NP PC3.2MM DIP LCP新料 黑色右防呆 黄铜镀锡

PART.NO: 42508W00-2*NPA-B3-SN
DWG.NO:
REV: A0
SHEET: 1/1